How to build a computer

Anqi Dong
adong@princeton.edu

24 April 2015

What do you think a computer is built on top of?

Levels of abstraction

User applications
(Facebook, Angry Birds, Microsoft Office, ...)

High-level code
(Java, Python, Swift, ...)

Low-level code
(C, Fortran, ...)

Machine bytecode
(x86, ARM, MIPS, ...)

Integrated circuit modules
(ALUs, memory, I/O buses, ...)

More levels of abstraction

Integrated circuit modules
(ALUs, memory, I/O buses, ...)

Bitwise logic
(lookup tables, logic gates, ...)

Transistors
(CMOS, BJTs, ...)

Semiconductor physics
(group velocity, band gaps, ...)

...

Transistors as switches

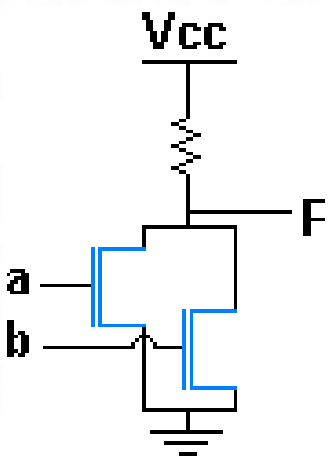

NMOS
NOR gate

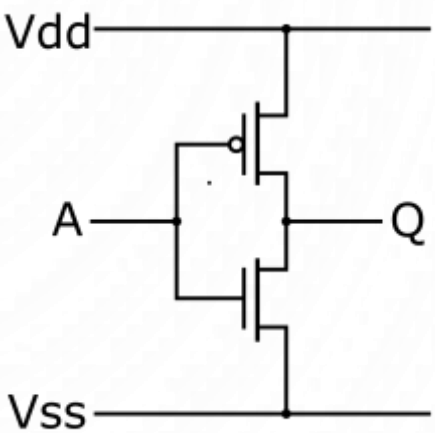

hybrid (PMOS + NMOS) NOT gate

Source: Wikipedia (various)

Logical functions

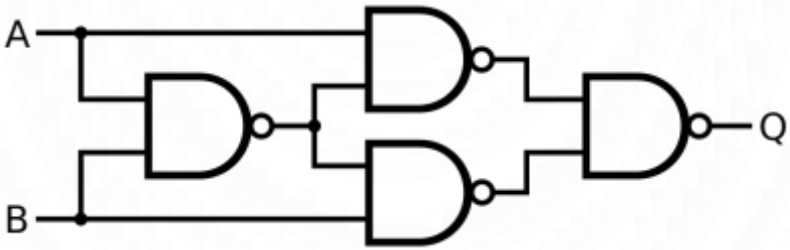

an XOR gate built using NAND gates

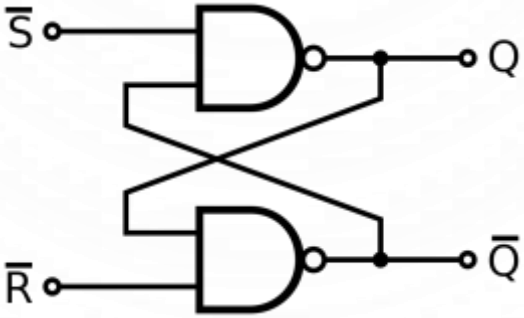

an SR flip-flop or latch, which has memory

Source: Wikipedia (various)

How can a computer communicate?

http://oregonstate.edu/conferences/sites/default/files/AustinAuditoriumPresentation.jpg

Clocking

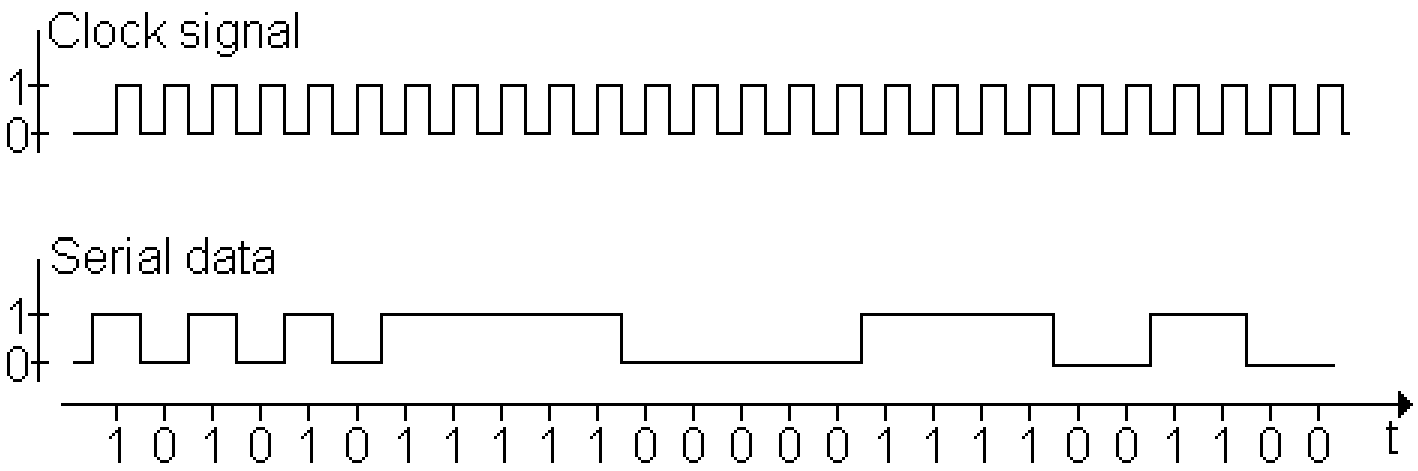

http://www9.dw.de/rtc/infotheque/digital_signal/fig3311.gif

Clocking

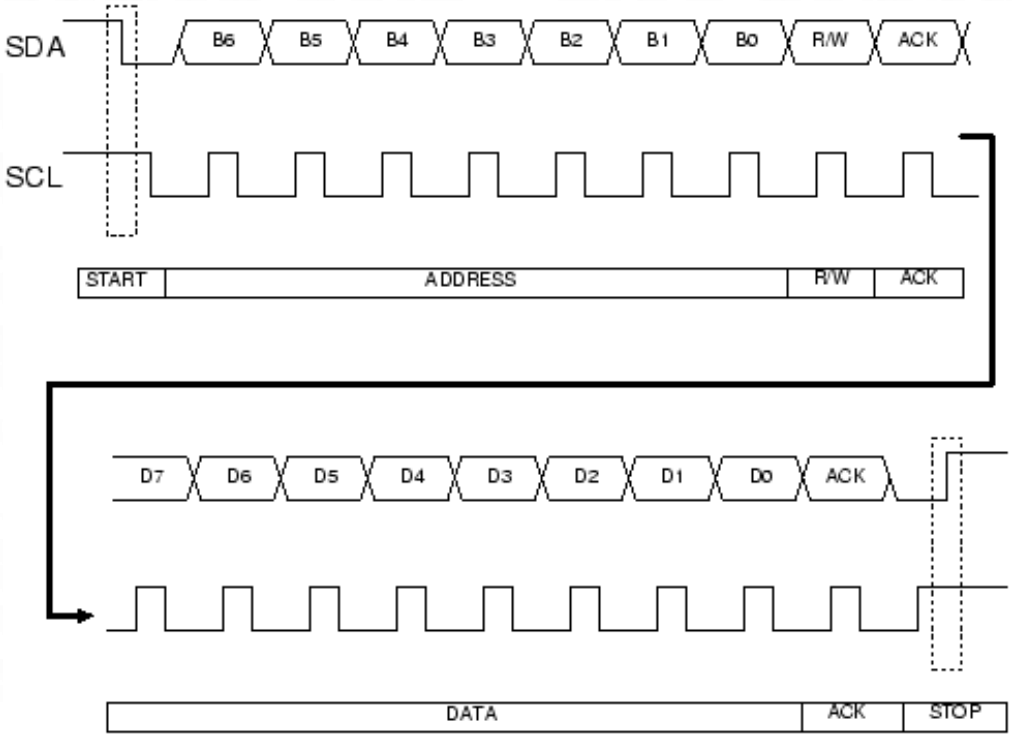

http://www.best-microcontroller-projects.com/images/i2c-tutorial-typical-signals.png

Clocking

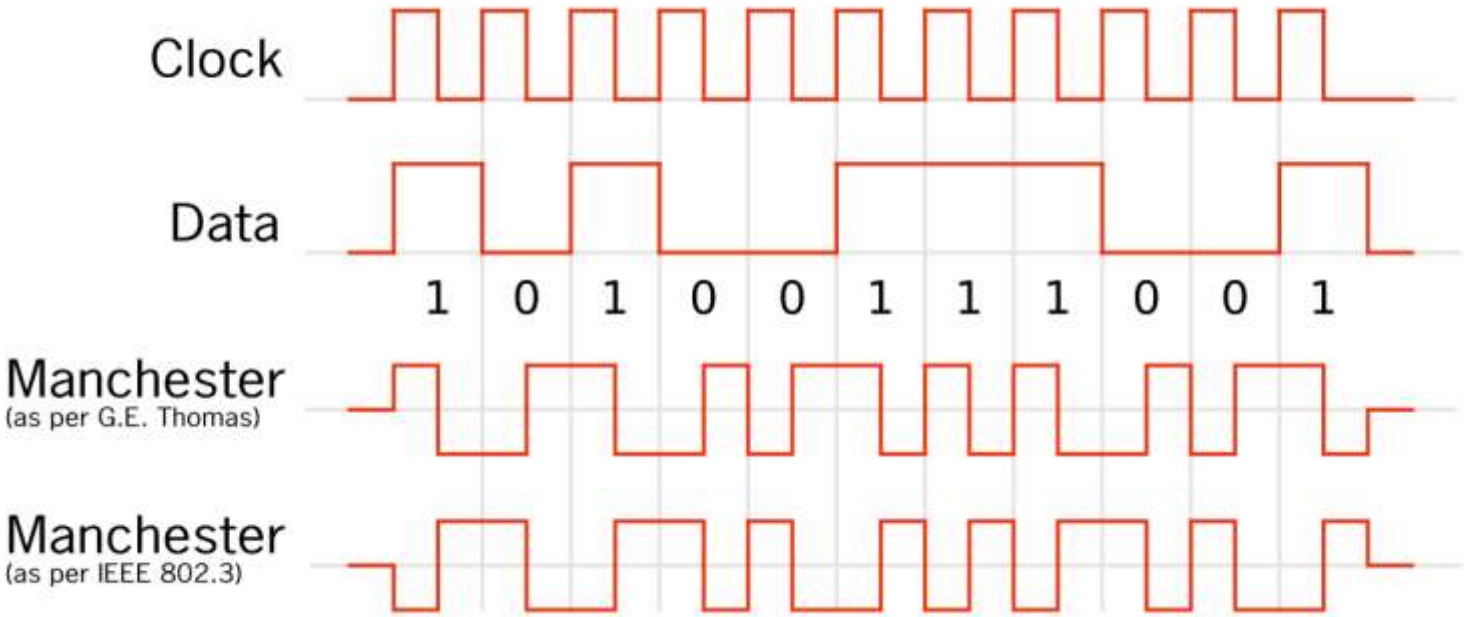

https://commons.wikimedia.org/wiki/File:Manchester_encoding_both_conventions.svg

Giving directions to your computer

A recipe

Combine the eggs and the flour in a large mixing bowl.

A high-level program line

Add the skirt's cost and the tie's cost and store it to the cart total.

Giving directions to your computer

A recipe

Combine the eggs and the flour in a large mixing bowl.

Potential MIPS assembly code

```
add $t0, $t1, $t2
```

Giving directions to your computer

A recipe

Combine	the eggs	and	the flour	in a large mixing bowl.

Potential MIPS machine code

000000	01001	01010	01000	00000	100000

A modern CPU today

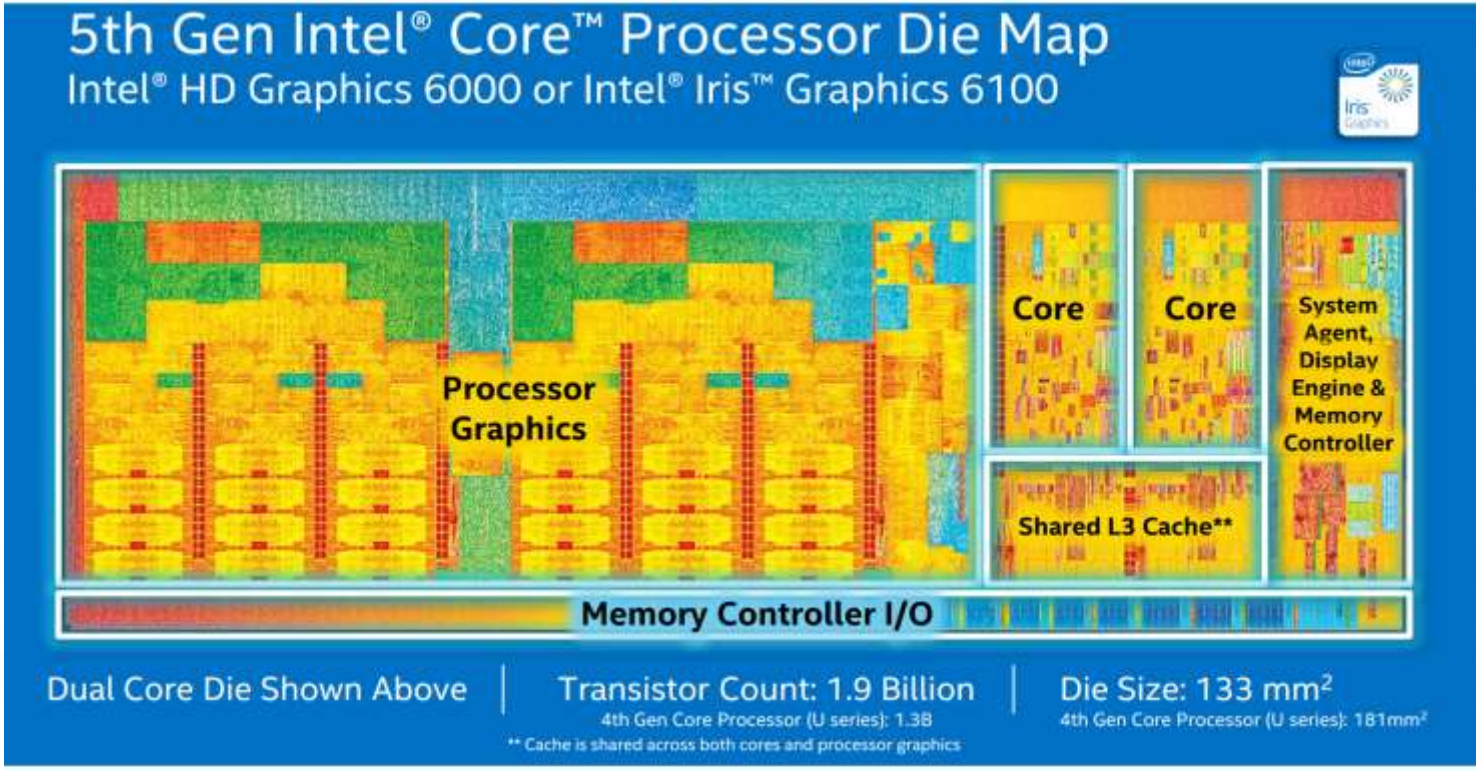

http://www.dailytech.com/Intels+BroadwellBase+Core+iSeries+SoCs+Finally+Hits+the+Market/article37051.htm

A sense of scale

- Modern processor fabrication lines have over **$1B** of equipment
- Intel's modern fabrication lines use a **14 nm** process
- The newest single processor chips have ~**5 billion** transistors

A sense of scale

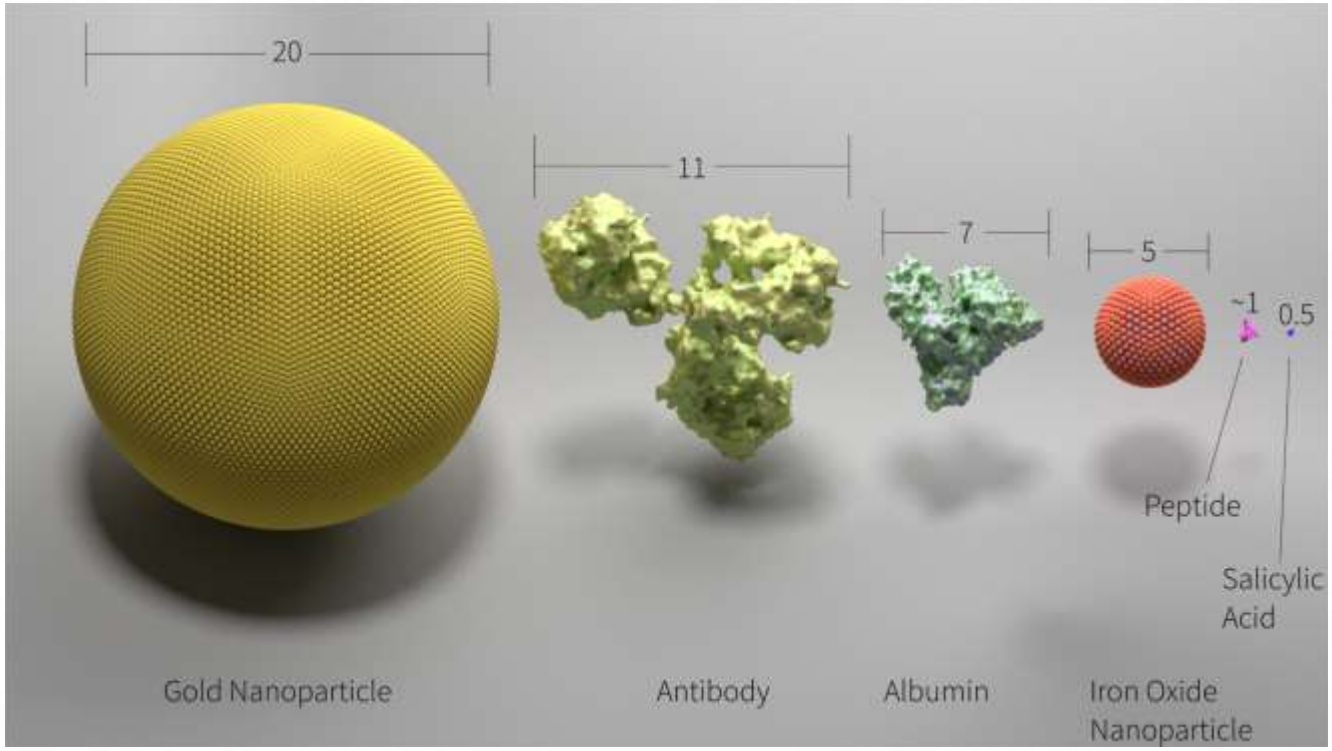

http://crowsandcats.blogspot.com/2013/04/visualizing-size-in-biochemical-systems.html

Moore's Law

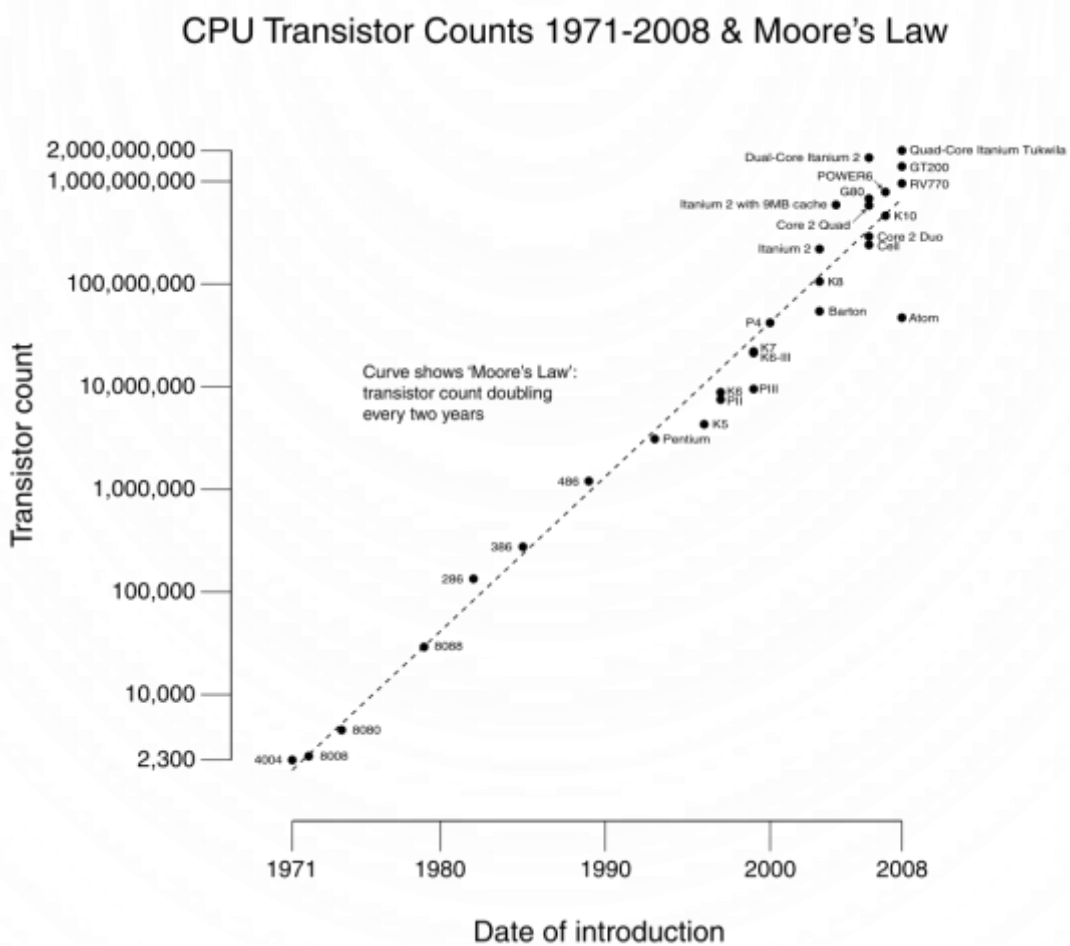
CPU Transistor Counts 1971-2008 & Moore's Law
Transistor count
2,000,000,000
1,000,000,000
100,000,000
10,000,000
1,000,000
100,000
10,000
2,300
Curve shows 'Moore's Law': transistor count doubling every two years
Dual-Core Itanium 2
Quad-Core Itanium Tukwila
GT200
RV770
POWER6
G80
Itanium 2 with 9MB cache
K10
Core 2 Quad
Core 2 Duo
Cell
Itanium 2
K8
Barton
Atom
P4
K7
K6-III
K6
PII
PIII
K5
Pentium
486
386
286
8088
8080
8008
4004
1971
1980
1990
2000
2008
Date of introduction

Building the OS

High-level programs
(Instagram, Cut the Rope, Photoshop, ...)

Virtual machines, interpreters [sometimes]
(Web browsers, Java, terminals, ...)

Operating system
(Windows, Mac OS, Linux)

Bootloader code
(BIOS, ...)

How do you run multiple programs simultaneously?

- Your computer has multiple cores now, but that's a new thing.
- All of your code used to all run on a single processor! How?
- Time-sharing: it's the same way you make your single (sequential) brain do multiple simultaneous tasks.

Music player “app”

- Demo!

More questions?

Slides will be emailed out and posted on the Splash website.